IRON HORSE FIREARMS

SENTRY 12

SENTRY 12 TACTICAL SHOTGUN
SAFETY & INSTRUCTION MANUAL

PRODUCT OF USA
PATENT PENDING

CAREFULLY READ INSTRUCTIONS
BEFORE OPERATING THIS FIREARM
IRONHORSEFIREARMS.COM
© 2021

OWNER INFORMATION

NAME: _____

SERIAL #: _____

PURCHASE DATE: _____

PATENT PENDING

CONTENTS

01 ..... SAFETY WARNING

03 ..... OVERVIEW
- Description
- Components
- Design Features
- Dimensions & Weight

05 ..... OPERATING INSTRUCTIONS
- Safety
- Loading

07 ..... EXPLODED VIEW

09 ..... OPERATING INSTRUCTIONS CON'T.
- Firing
- Clearing a Jam
- Unloading

11 ..... ASSEMBLY & DISASSEMBLY

13 ..... ADDITIONAL INFORMATION
- Warranty
- Service

SAFETY

STATEMENT OF LIABILITY

Iron Horse will not be liable for any damages or injury caused by your use of the content, or any Iron Horse products, services, including but not limited to, any failure of performance, error, omission, interruption, defect, delay in operation of transmission, computer virus, or line failure. Iron Horse will not be liable for any damages or injury, including but not limited to, indirect, incidental, special, punitive, exemplary or consequential damages (including, but not limited to, lost profits and damages that result from inconvenience, delay, or loss of use) that result from the use of, the inability to use, or reliance upon the content or any products or services obtained on or through this site, even if there is negligence by Iron Horse or by an authorized Iron Horse representative, or an authorized Iron Horse presentative has been advised of the possibility of such damages, or any of the above. The above limitation or exclusion may not apply to you to the extent that applicable law may not allow the limitation or exclusion of liability for such damages. Iron Horse's total liability to you for losses, damages and causes of action will not be greater than the amount you paid to Iron Horse, if any, to access Iron Horse content, or any products, services.

ENSURE YOUR UNDERSTANDING OF THESE INSTRUCTIONS AND WARNINGS BEFORE USE.

This manual must accompany this firearm and be transferred with it upon change of ownership or when presented to another person. Contact Iron Horse for extra copies of this safety manual. www.ironhorsefirearms.com

These warnings are to ensure the safe handling and operation of the firearm. Failure to follow these instructions may result in serious injury or death.

Iron Horse firearms are designed to function properly for knowledgeable users. Do not use your firearm unless you are familiar with these instructions are comfortable with using your firearm in a safe manner.

SAFE GUN HANDLING HABITS ARE YOUR RESPONSIBILITY.
VIOLATION OF THE FOLLOWING RULES CAN CAUSE HARMFUL ACCIDENTS.

Before handling a firearm, understand its operation in its entirety.

Never handle a firearm without checking the magazine and the chamber.

Ensure the muzzle is always pointed in a safe direction.

Do not point a firearm at anything you do not want to fire upon.

Clear the firearm of all ammunition and check the barrel of the unloaded firearm for obstructions.

SAFETY

Never store a loaded firearm in the home or vehicle.

Do not store any firearm with a cartridge in the chamber.

Keep firearms and ammunition separate and away from children.

Using, cleaning, or handling firearms in poorly ventilated areas may result in exposure to lead and other substances known to cause birth defects, reproductive harm, and other physical harm. Ensure adequate ventilation. Always be sure to wash hands after handling firearms and ammunition.

Always use eye and ear protection during firearm operation. Never shoot a surface that has potential for ricochet.

Never discharge the firearm without being sure of your target and what lies beyond.

If the gun doesn't fire when trigger is pulled, maintain the same target for at least 30 seconds before removing the magazine and unfired case.

Be aware of your surroundings and ensure that people cannot accidentally enter the line of fire. Heed all rules and regulations when operating at a target range. Do not cross rivers or similar obstacles while the firearm is loaded.

Ensure that nobody operates the firearm that does not understand gun safety and proper handling.

WARNING: THE FIREARM CAN REACH TEMPERATURES HIGH ENOUGH TO CAUSE SEVERE BURNS.

When transporting your firearm, be sure your firearm is unloaded with safety engaged. If you have questions about the safe operation of our products, please contact Iron Horse Firearms at: ironhorsefirearms.com

Do not modify any part of the firearm.

Do not handle firearms under the influence of alcohol, drugs, or medications.

Point the firearm in a safe direction during loading.

Do not load a firearm unless you expect to immediately shoot.

SAFE GUN HANDLING IS YOUR RESPONSIBILITY.

OVERVIEW

DESCRIPTION

The Sentry 12 is a tactical, magazine fed, 12-gauge, pump action shotgun. The Sentry 12 represents a leap forward in shotgun modularity, simplicity, and ease of use. The entire shotgun breaks down for field disassembly and cleaning with the removal of a single takedown pin.

COMPONENTS

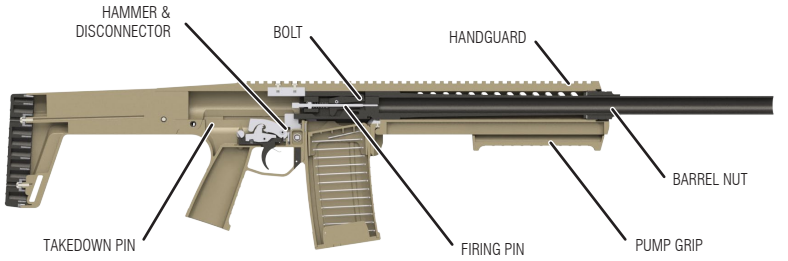

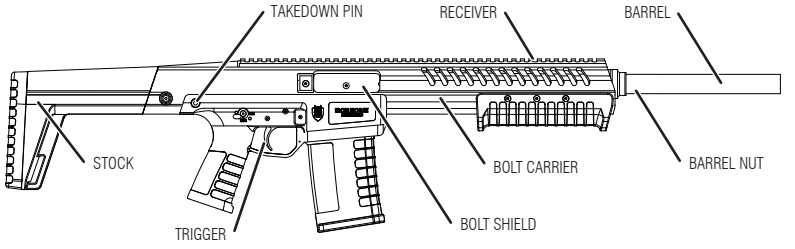

DESIGN FEATURES

Operating System	Pump Action
Gauge	12
Capacity	5+1 magazine fed, 3” shells
Chamber	12-gauge 3.0” (76 mm)
Barrel Length	18.50” (470 mm)
Length of Pull	13.00” (330 mm)
Forend Travel	04.10” (104 mm)
Accessory Mount	Picatinny Rail
Controls	Ambidextrous

DIMENSIONS AND WEIGHT

Total Length	36.03”	915 mm
Total Width	02.1”	51 mm
Total Height	07.25”	204 mm
Width of Grip	01.25”	30 mm
Width of Forend	02.1”	51 mm
Width of Stock	02.10”	54 mm
Weight	06.9 lbs.	3.1 kg.

*All specifications subject to change.

EXPLODED VIEW

1. BARREL
2. BARREL NUT WASHER
3. BARREL NUT
4. RECEIVER
5. EXTENSION KEY SCREWS
6. SLING MOUNT (L)
7. STOCK
8. BUTT PAD
9. BUTT PAD SCREWS
10. SLING MOUNT (R)
11. SLING MOUNT SCREW
12. BARREL EXTENSION
13. EXTENSION KEY
14. BRASS DEFLECTOR
15. BRASS DEFLECTOR SCREW
16. LOCKING LUG
17. EXTRACTOR PIN
18. BOLT
19. EXTRACTOR SPRING
20. EXTRACTOR
21. BOLT SHIELD
22. BOLT SHIELD SCREW
23. ACTION LOCK
24. ACTION LOCK SPRING
25. TRIGGER SPRING
26. HAMMER
27. DISCONNECTOR
28. DISCONNECTOR SPRING
29. TRIGGER
30. SAFETY SELECTOR DETENT
31. MAG RELEASE CENTER
32. MAG RELEASE SPRING
33. MAG RELEASE (L)
34. MAG RELEASE PIN (L)
35. FIRING PIN
36. FIRING PIN SPRING
37. FIRING PIN RETAINING PIN
38. BOLT PIN
39. LUG PIN

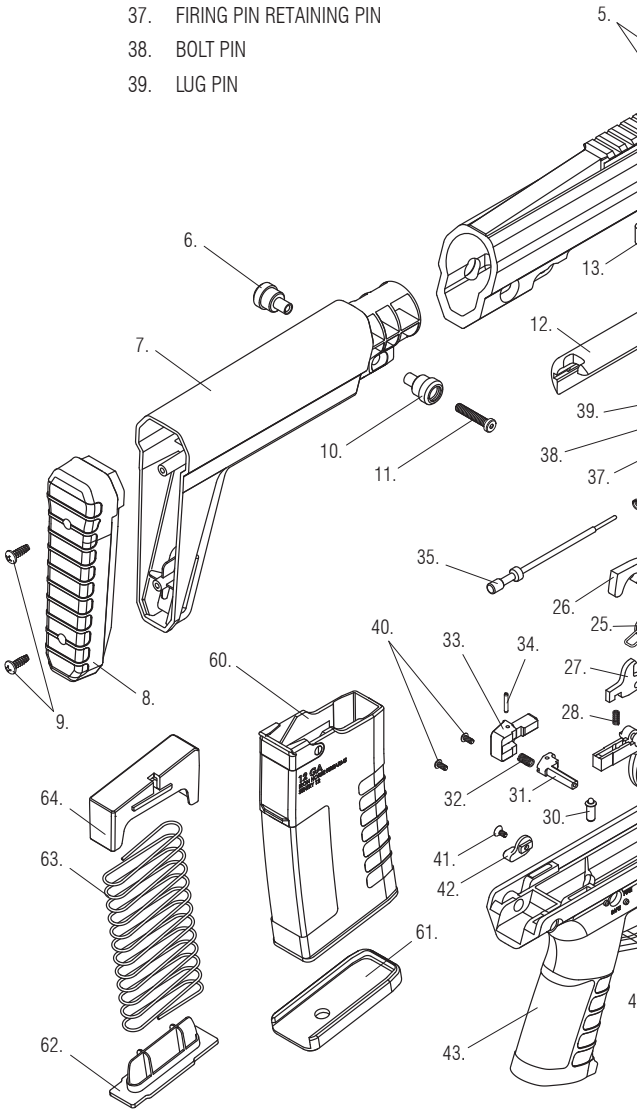

EXPLODED VIEW

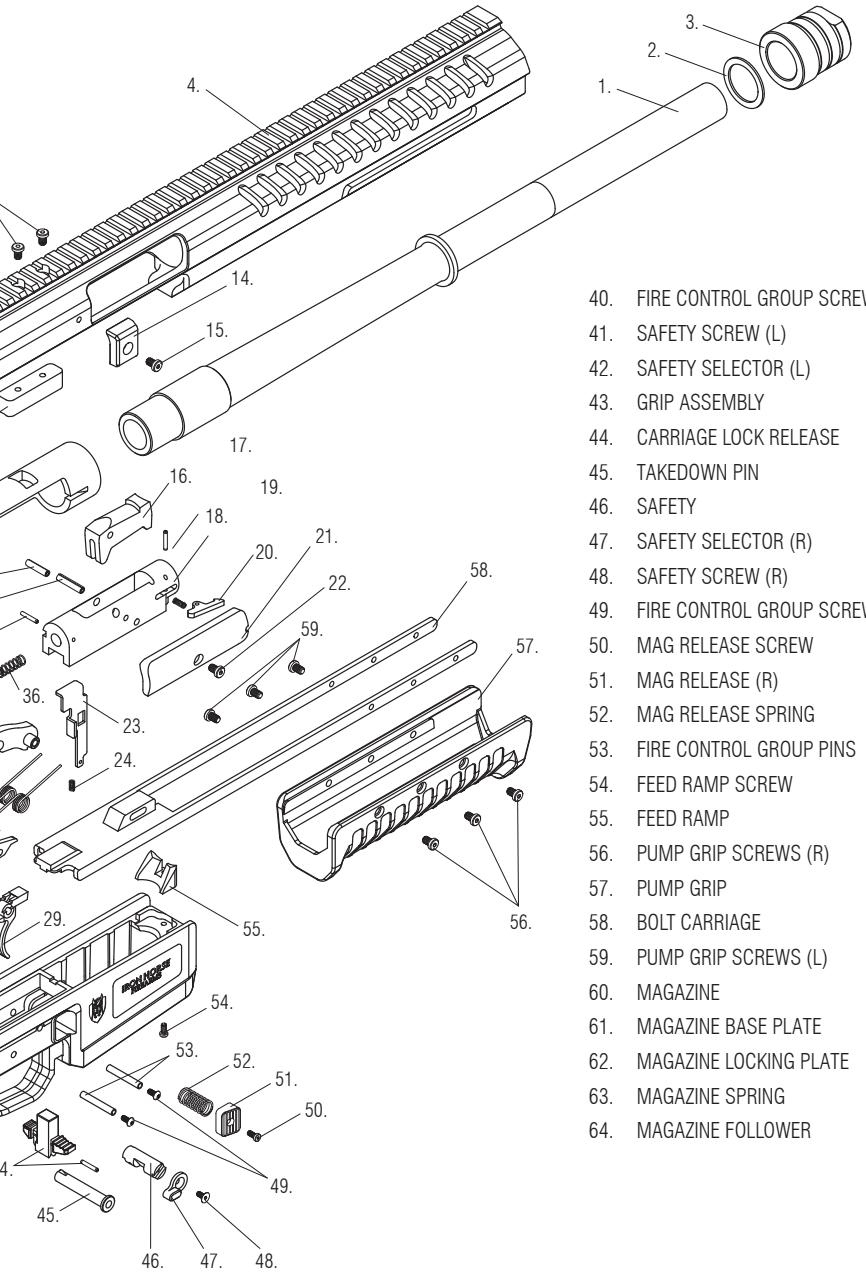

40. FIRE CONTROL GROUP SCREWS (L)
41. SAFETY SCREW (L)
42. SAFETY SELECTOR (L)
43. GRIP ASSEMBLY
44. CARRIAGE LOCK RELEASE
45. TAKEDOWN PIN
46. SAFETY
47. SAFETY SELECTOR (R)
48. SAFETY SCREW (R)
49. FIRE CONTROL GROUP SCREWS (R)
50. MAG RELEASE SCREW
51. MAG RELEASE (R)
52. MAG RELEASE SPRING
53. FIRE CONTROL GROUP PINS
54. FEED RAMP SCREW
55. FEED RAMP
56. PUMP GRIP SCREWS (R)
57. PUMP GRIP
58. BOLT CARRIAGE
59. PUMP GRIP SCREWS (L)
60. MAGAZINE
61. MAGAZINE BASE PLATE
62. MAGAZINE LOCKING PLATE
63. MAGAZINE SPRING
64. MAGAZINE FOLLOWER

OVERVIEW

AMMUNITION

The Sentry 12 is chambered for 12-gauge 3" shells and may safely fire both lead and steel shotgun shells 2-3/4 and shorter are also safe to fire, but anything shorter that 2-3/4" should be thoroughly tested for reliable feeding and ejection. For reference, the chamber gauge and length is indicated on the grip of the shotgun.

Only use commercially available ammunition that meets SAAMI standards. Always inspect your ammunition to ensure it is in satisfactory condition. Do not use non-standard, reloaded or damaged ammunition. All warranties, expressed or implied, are voided and Iron Horse will not be liable for property damage or personal injury and consequential damages, if faulty or non-standard ammunition is used in any Iron Horse firearm.

WARNING:

ALWAYS USE SHELLS OF THE CORRECT GAUGE AND LENGTH. DO NOT USE NON-STANDARD AMMUNITION OR SHELLS WITH PRESSURES EXCEEDING SAAMI STANDARDS. FAILURE TO FOLLOW THIS MAY RESULT IN SERIOUS INJURY OR DEATH AND DAMAGE TO YOUR FIREARM.

SLING MOUNTING

The Sentry 12 comes equipped with two quick-disconnect sling mounting locations directly forward from the tailstock.

MAINTENANCE

CAUTION: NEVER USE AUTOMOTIVE BRAKE CLEANER OR ANY SOLVENT NOT DESIGNED FOR POLYMER FIREARMS. DOING SO MY DAMAGE THE FIREARM AND VOID YOUR WARRANTY.

Disassemble the Sentry 12 (See disassembly instructions on page 14).

Thoroughly clean all exterior sides of the bolt and receiver with solvent and brush.

Brush the barrel bore and chamber with a good powder removing solvent and bore brush. Wipe the areas clean with patches or a swab.

Using a small brush dipped in solvent, remove all deposits from around the breech of the barrel and barrel extension, as well as all adjacent areas that have been subjected to powder or primer residue.

Clean the magazine with solvent and brush if needed.

LUBRICATION

After cleaning your entire Sentry 12, use a clean cloth to apply a light coat of gun oil to any metal surfaces and wipe clean. If the grip assembly requires lubrication, do so from the top of the assembly.

Manually cycle the action back and forth to check the function of the firearm. If any parts are damaged or badly worn or the firearm does not work correctly the firearm should not be fired and should be returned to Iron Horse for servicing immediately.

WARNING: Discharging a firearm with oil, grease, or any other material even partially obstructing the bore could result in serious injury or death and serious damage to your firearm.

TROUBLESHOOTING

Proper firearm maintenance is the only way to ensure that your Sentry 12 always operates as designed. In the unlikely event of a Sentry 12 malfunction, refer to the list of suggested remedies below.

FAILURE TO FIRE

You may be experiencing a misfire and should point the barrel of the Sentry 12 in a safe direction, engage the safety by ensuring the selector is rotated towards 'SAFE'. Wait at least 30 seconds before cycling the pump grip and ejecting the round.

STORAGE

The use of a locking device or safety lock is only one aspect of responsible firearm storage. Firearms should always be stored unloaded and locked in a location that is both separate from their ammunition and inaccessible to children and other unauthorized persons.

WARNING

THE USE OF A LOCKING DEVICE OR SAFETY LOCK IS ONLY ONE ASPECT OF RESPONSIBLE FIREARM STORAGE. FIREARMS SHOULD BE STORED UNLOADED AND LOCKED IN A LOCATION THAT IS BOTH SEPARATE FROM THEIR AMMUNITION AND INACCESSIBLE TO CHILDREN AND OTHER UNAUTHORIZED PERSONNEL.

OPERATING INSTRUCTIONS

SAFETY

The Sentry 12 features a manual safety located on the grip assembly. When the safety is activated, the prevents the trigger from being pulled. The safety is generally engaged and disengaged with the thumb. Always treat firearms as if they are loaded.

FIGURE 1

FIGURE 2

FIGURE 3

LOADING

Do not load the firearm before reading and understanding this manual in its entirety.

Ensure that the Sentry 12 is pointed in the safest possible direction at all times.

Perform a thorough safety inspection to ensure the chamber is empty.

Engage the safety (a) by rotating the safety selector to SAFE. (Fig. 1)

Press the magazine release (b) and remove the magazine. (Fig. 2)

Feed each round into the magazine (c) from the top. Load one round at a time. (Fig. 3)

Place the next round on top of the previous round and repeat until loaded. Do not load the magazine beyond its capacity.

Only use manufacturer approved ammunition.

Always use shells of the correct gauge and length or shorter.

Cycle the pump grip (g) to chamber a round. (Fig. 5)

Your Sentry 12 is now loaded.

FIRING

Always use adequate eye and ear protection before operating your Sentry 12.

This product will fire with the magazine removed. Keep your fingers away from the trigger until you have made the conscious decision to fire.

Aim at the target, making sure it is free of obstructions in front and behind.

Rotate the safety selector (d) to FIRE. (Fig. 4)

Steady your aim and place your trigger finger within the trigger guard (e). (Fig. 4)

When the trigger (f) is depressed, the Sentry 12 will fire a round at your target. (Fig. 4)

Cycle the pump grip (g) to eject the case. (Fig. 5)

FIGURE 4

FIGURE 5

UNLOADING

Rotate the safety selector (h) to SAFE. (Fig. 6)

Ensure the muzzle is pointed in the safest direction before unloading the firearm.

Keep fingers outside of trigger guard and release the magazine by suppressing the magazine release(b). (Fig.2)

Cycle the pump grip (g) to ensure the chamber is empty. (Fig. 5)

With the pump grip in the rear most position, visually and manually inspect the chamber and magazine to ensure they are empty.

Your Sentry 12 is now unloaded.

FIGURE 6

FIGURE 7

DISASSEMBLY & ASSEMBLY

For regular maintenance, it will be required to disassemble the Sentry 12. The following steps are to be followed in order for successful disassembly and maintenance of your Iron Horse firearm.

ALWAYS ENSURE THE SENTRY 12 IS CLEAR OF ALL AMMUNITION BEFORE REMOVING TAKEDOWN PIN. IF YOU HAVE ALREADY FIRED, WAIT FOR THE FIREARM TO COOL BEFORE DISASSEMBLY.

Use the magazine release (d) to remove the magazine from your Sentry 12. (Fig. 3)

Check to be sure the firearm is not loaded and the chamber is empty.

Engage the safety by rotating the safety selector (a) to SAFE. (Fig.1)

Remove the single takedown pin (b) from the rear of the grip assembly. (Fig.1)

Pivot the grip assembly (c) down and away from the receiver. (Fig. 2, 4)

Loosen and remove barrel nut and washer (e). (Fig. 3)

Pull the barrel (f) directly forward and away from the receiver. (Fig. 3)

FIGURE 8

FIGURE 9

FIGURE 10

FIGURE 11

WARNING: Any further disassembly should only be performed by an Iron Horse approved certified gunsmith or by Iron Horse Firearms. Attempting further disassembly will void your warranty.

WARRANTY INFORMATION

SCOPE OF WARRANTY

Iron Horse Firearms products are warranted to be free from defective materials and workmanship for the life of the original purchaser. Iron Horse Firearms obligation under this warranty shall be limited to (1) repairing or (2) replacing any product upon inspection at Iron Horse Firearms and based on its discretion, is found to defective in material or in workmanship. This warranty is limited and does not extend to: careless handling, abuse and misuse, unauthorized adjustments or modifications, use of improper ammunition, excessive or unreasonable use, ordinary wear & tear, rust or corrosion, and barrel obstruction. Repairs are warranted for the duration of the original warranty and applies only to factory built products.

EXCLUSIVE REMEDY

The remedies in this section and in the warranty agreement constitute the sole and exclusive remedies of any authorized customer, as well as its successors and assigns, for any defect in the product.

DISCLAIMER

The warranty stated in this agreement is the sole and exclusive warranty pertaining to the product. Iron Horse Firearms disclaims any warranty express or implied, including, without limitation, any warranty of merchantability or fitness for a particular purpose. In no event shall Iron Horse Firearms be responsible for any indirect, incidental or consequential damages including, without limitations, lost profits, costs of delay, with respect to economic loss or injury to property or to third parties, whether as a result of breach of express or implied warranty, negligence or otherwise. Prior to returning any Iron Horse Firearms product for warranty work, you must receive return material authorization (RMA) from our customer service department. The contact information is shown below. Items must be returned prepaid to Iron Horse. Iron Horse Firearms accepts no responsibility for items lost or damaged in shipping. Items that are returned and found to be Out-of-Warranty will be repaired at the customer's expense; however, no work will be performed without the customer's written authorization.

E-mail **support@ironhorsefirearms.com** for shipping authorization.

✂

CUSTOMER WARRANTY CARD

THIS SLIP TO BE MAILED WITH UNLOADED SENTRY 12 FOR WARRANTY & SERVICE

Do not ship with ammunition. Iron Horse recommends shipment to be insured by owner.

NAME: _____

SERIAL #: _____ PURCHASED: ____/____/____

ADDRESS: _____

_____

PHONE: _____ E-MAIL: _____

CAREFULLY READ INSTRUCTIONS & WARNINGS
BEFORE OPERATING THIS FIREARM
IRONHORSEFIREARMS.COM
© 2021